EXTERNAL DIMENSION

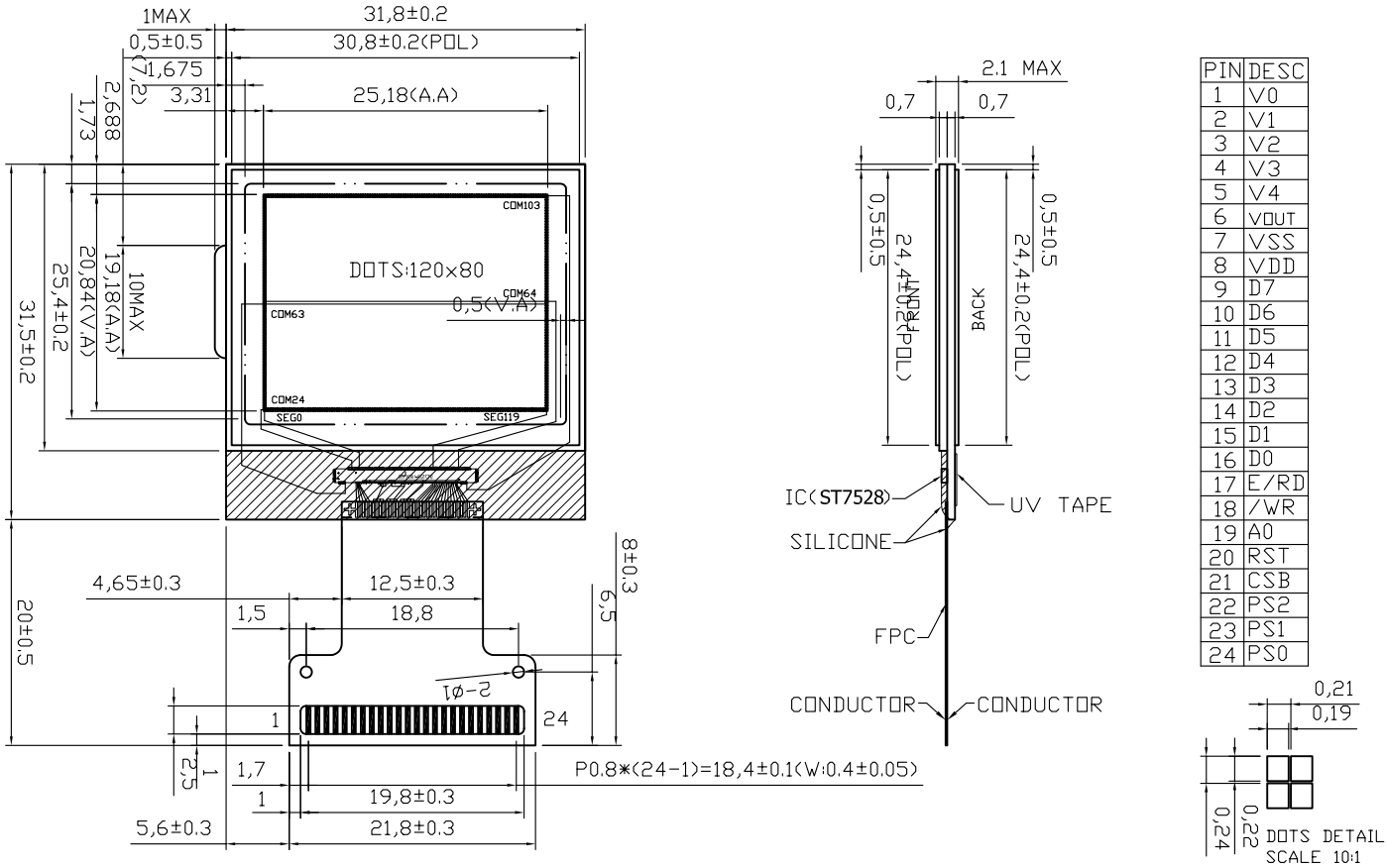

PIN	DESC
1	V0
2	V1
3	V2
4	V3
5	V4
6	VOUT
7	VSS
8	VDD
9	D7
10	D6
11	D5
12	D4
13	D3
14	D2
15	D1
16	D0
17	E/RD
18	/WR
19	A0
20	RST
21	CSB
22	PS2
23	PS1
24	PS0

NOTE:
1. DISPLAY TYPE: FSTN 2. POLARIZER MODE:TRANSFLECTIVE/POSIVE
3. VIEWING DIRECTION: 6:00 4. DRIVE METHOD: 1/80 DUTY;1/9BIAS
5. OPERATING VOLTAGE: 10.0 V
6. OPERATING TEMP: -20°~+70°
7. STORAGE TEMP: -30°~+80°
8. DRIVE IC: ST7528 9. CONNECTOR: COG+FPC
10. GENERRAL TOLERANCE: ±0.2